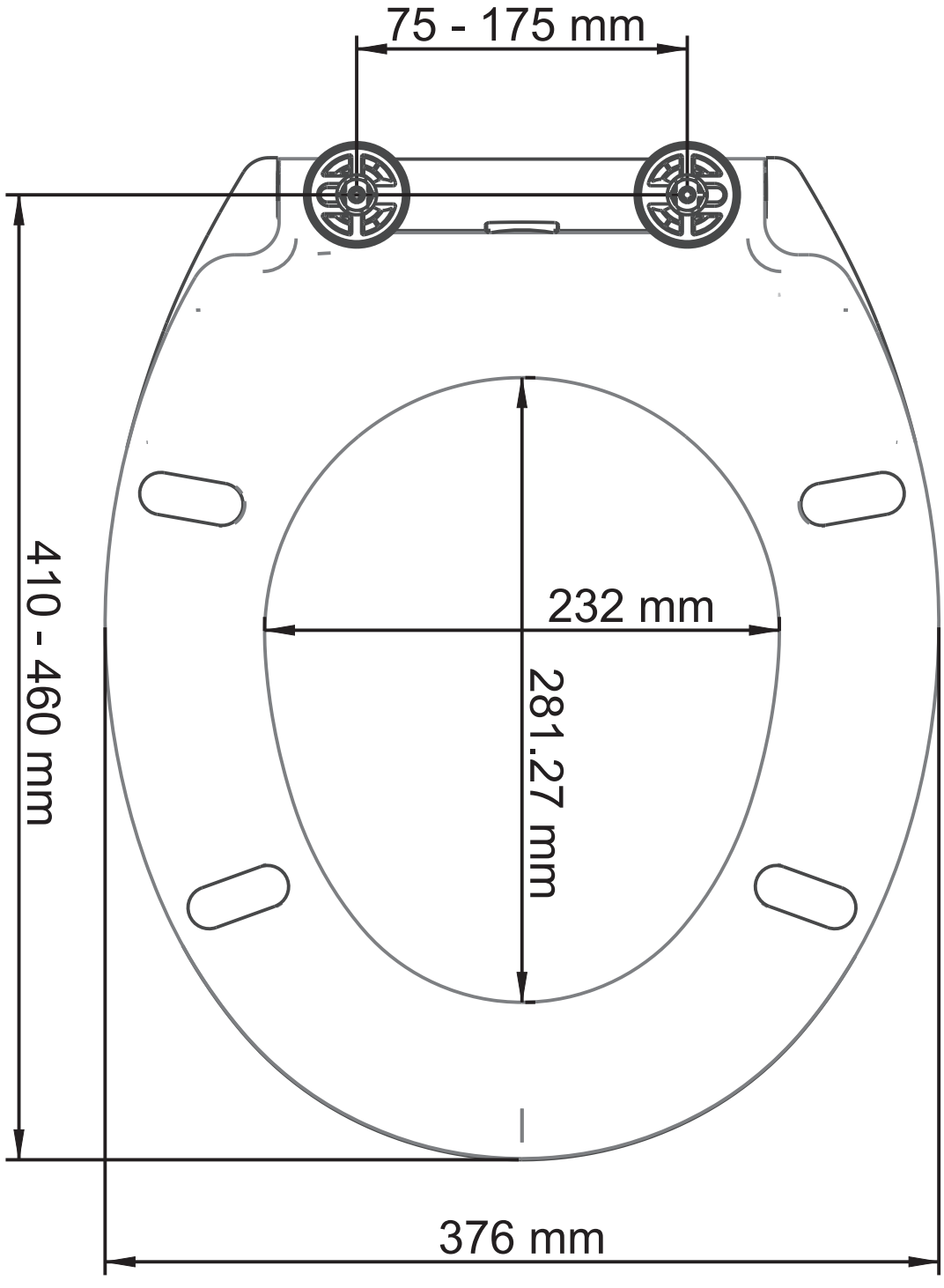
75 - 175 mm
410 - 460 mm
232 mm
281.27 mm
376 mm

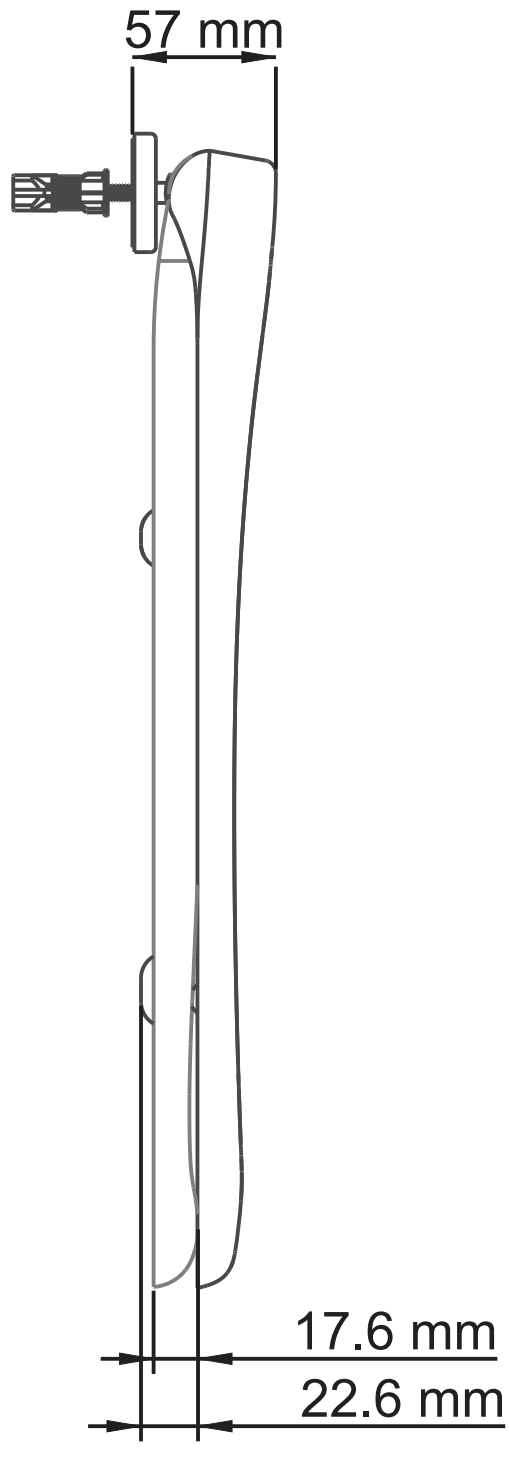
57 mm
17.6 mm
22.6 mm